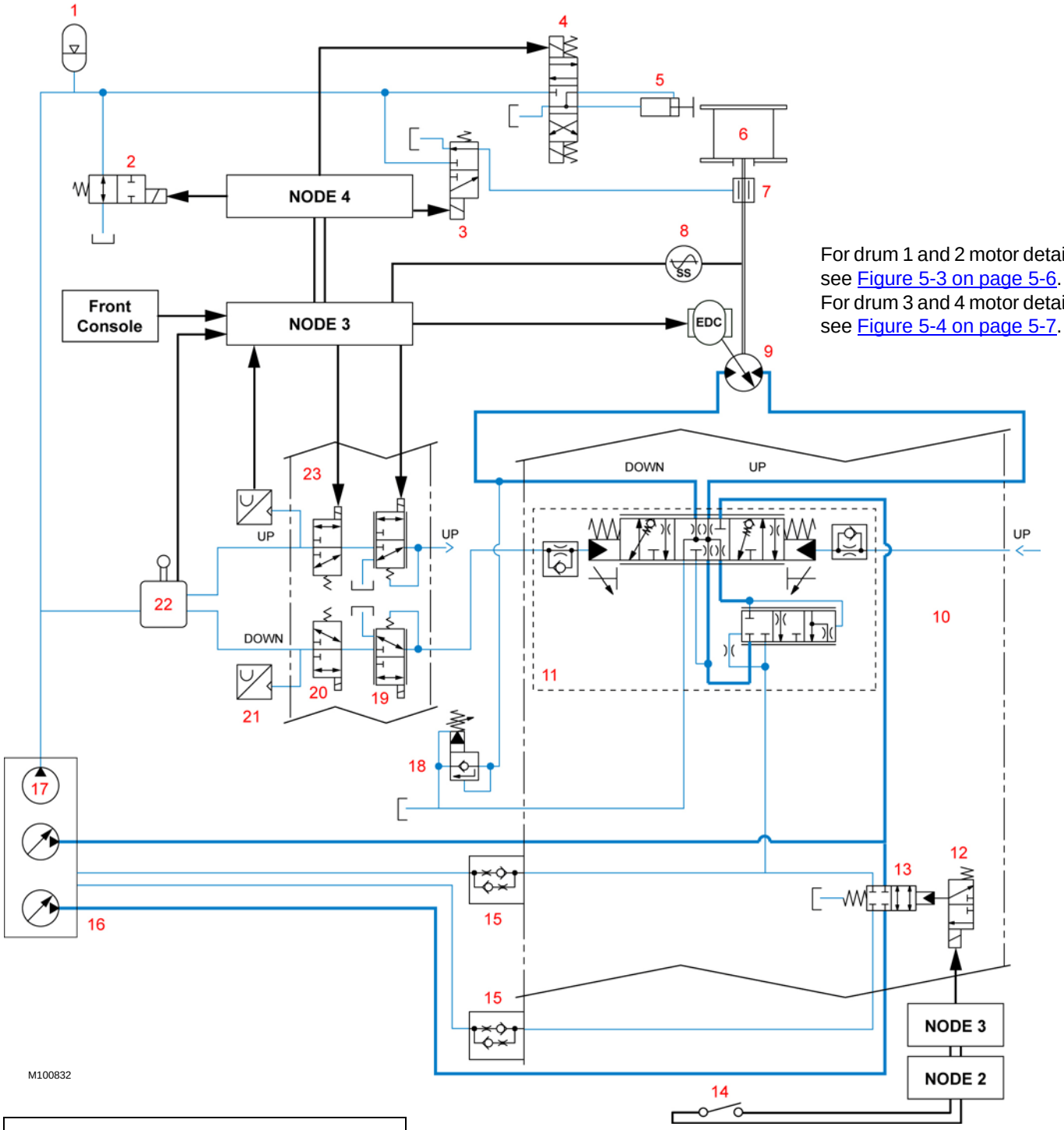

For drum 1 and 2 motor detail, see Figure 5-3 on page 5-6.
For drum 3 and 4 motor detail, see Figure 5-4 on page 5-7.

Electrical Connection	
Working Flow	
Pilot or other non-working flow	

For clarity, not all components shown.
See drawing 81021003.

Figure 5-2 System Diagram